Off-design performance modeling results for a supercritical CO_2 waste heat recovery power system

SuperCritical Technologies, Inc.
5747 Imperial Way SW,
Bremerton, WA 98312

Steven A. Wright
swright@supercritical.tech

Chal S. Davidson
cdavidson@supercritical.tech

Craig Husa
chusa@supercritical.tech

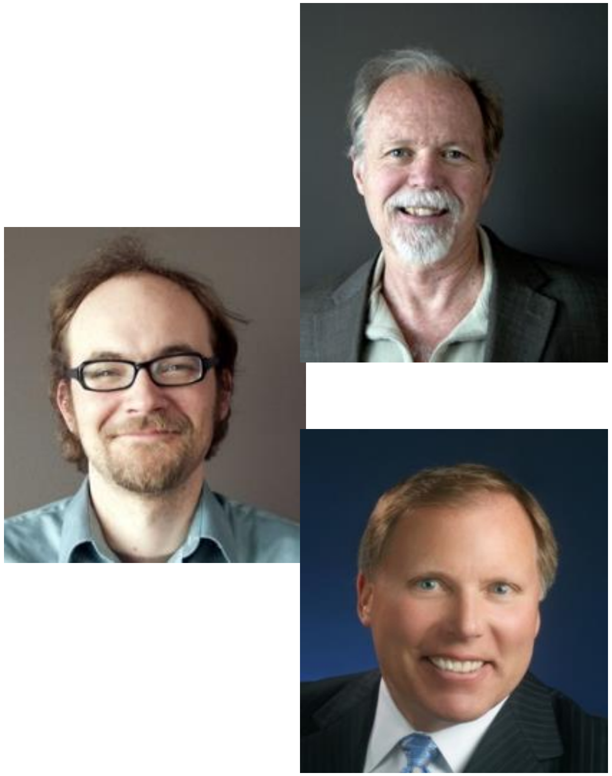

V20150515

Introduction

- **Goal: Describe Off Design Performance of a sCO2 power plant operating as a bottoming cycle on a Solar Turbines Titan 130: *(Steady-State)***
- **Performance Characteristics:**
  - **Titan 130**
  - **sCO_2 plant**
- **Process Flow Diagram of the sCO2 plant: *On Design Point***
- **Identify Major Control Variables**
  - **Variable Parameters: *Comp Speed, Comp. Inlet Pressure, Fan Speed, Split Flow***
  - **Fixed Parameters: *Titan 130 Operating T and mass flow, Turbine and MC2 speed***
- **Heat Exchanger Model**
- **Compressor Model**
- **Turbine Model**
- **Performance Results**
  - **Electrical Power versus MC1 rpm**
  - **State Point Temperatures versus MC1 rpm**
  - **Generator Power versus Ambient Temperature**
  - **With Compensation: speed compensation, with speed and pressure compensation**
- **Summary and Conclusions**
- **Dynamic Modeling Results (time permitting)**

Performance Characteristics of

Gas Turbine, sCO2 WHR Plant, Combined Cycle

Titan 130 -20501S Axial GSC 60 Hz STANDARD GAS

Property Type	Value
Mass Flow Rate of Combustion Gas and Temperature	47.13 kg/s 512 C
Combustion Power (Thermal)	40.14 MW.th
Waste Heat in Exhaust	25.26 MW.th
Ambient Performance Temperature	20.4 C
Electrical Power at Gen. Terminals	13.7 MWe
Gas Turbine Efficiency	34.2%

sCO_2 Cycle Properties

First Law Power	5056 kWe
Mechanical to Electrical Efficiency (gen, leak, seals, gear bear…)	93.01%
Generator Terminal Power	4573 kWe
Eff to Generator Terminals	22.78%
Eff. Waste Heat Recovery	79.48%
Thermal Power to CO_2	20.1 MW_{th}
Combined Cycle Net Eff. at Gen. Terminals	**46.9%**

General Operating Conditions:

sCO2 Bottoming Cycle produces 1/3 of the Gas Turb Elect. Pwr.

Combined Cycle Elect. Eff_{GT}= 46-48%

sCO2 Split Flow with Preheating Cycle

WHR Glide Temperature Curve

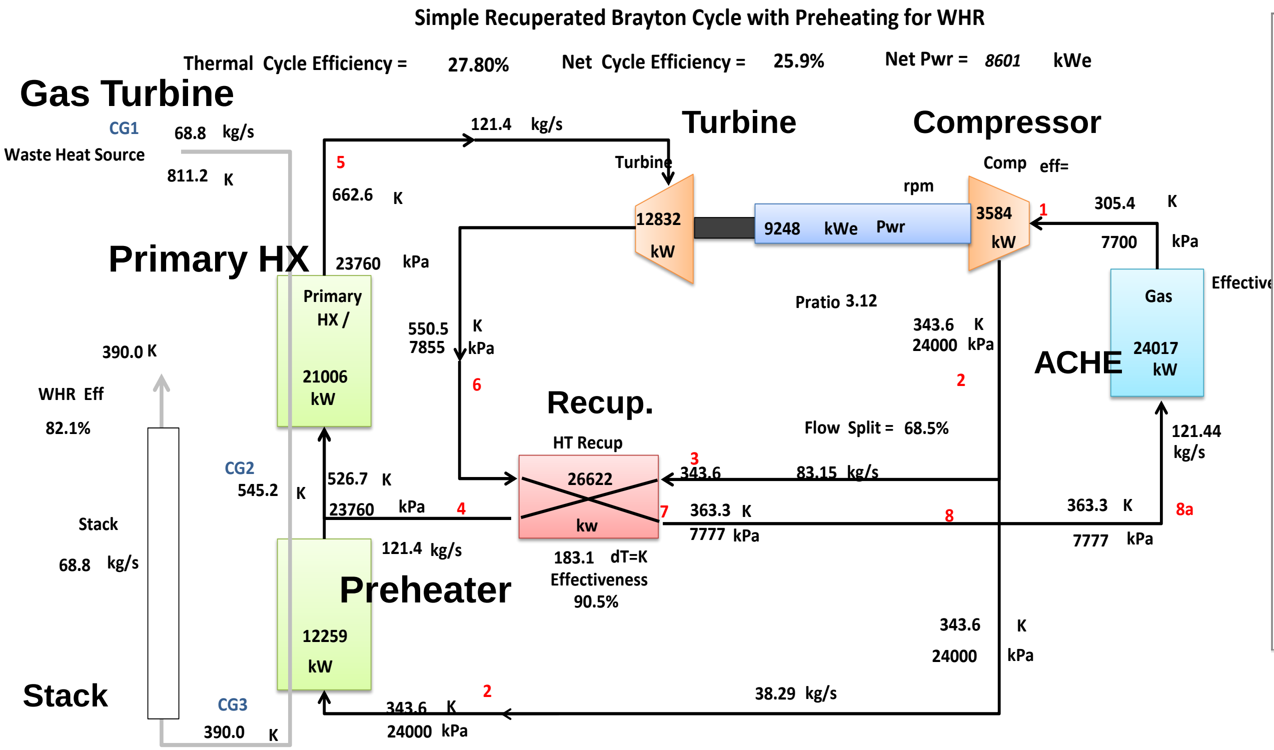

Glide Curve

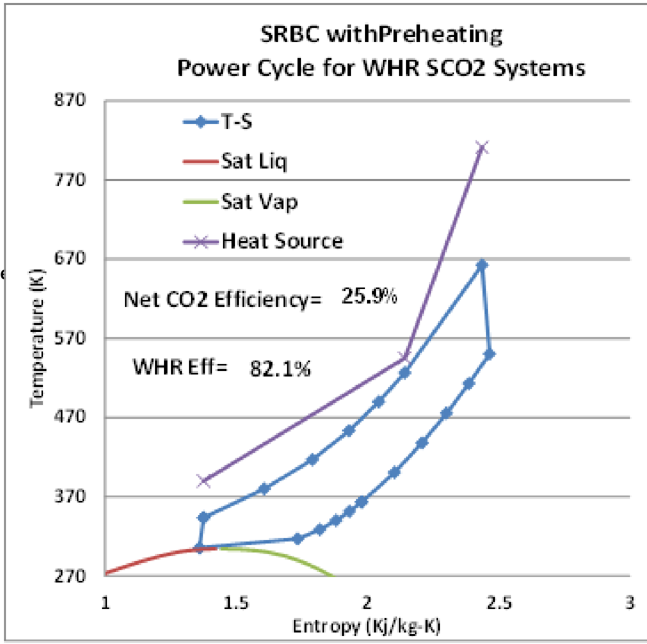

Preheating with Split Flow Cycle:

Combustion Gas (CG) Exit Temp is low (see glide curve) (90-120 C)

This Increases Waste Heat Recovery Efficiency $eff_{WHR}=(Q_{CO2}/Q_{WH}) \sim 80\%$

Thermal Cycle Efficiency: eff $_{CO2}$= 22% - 25%

sCO_2 Process Flow Diagram Of Proposed sCO2 WHR Plant Operating at the Design Point

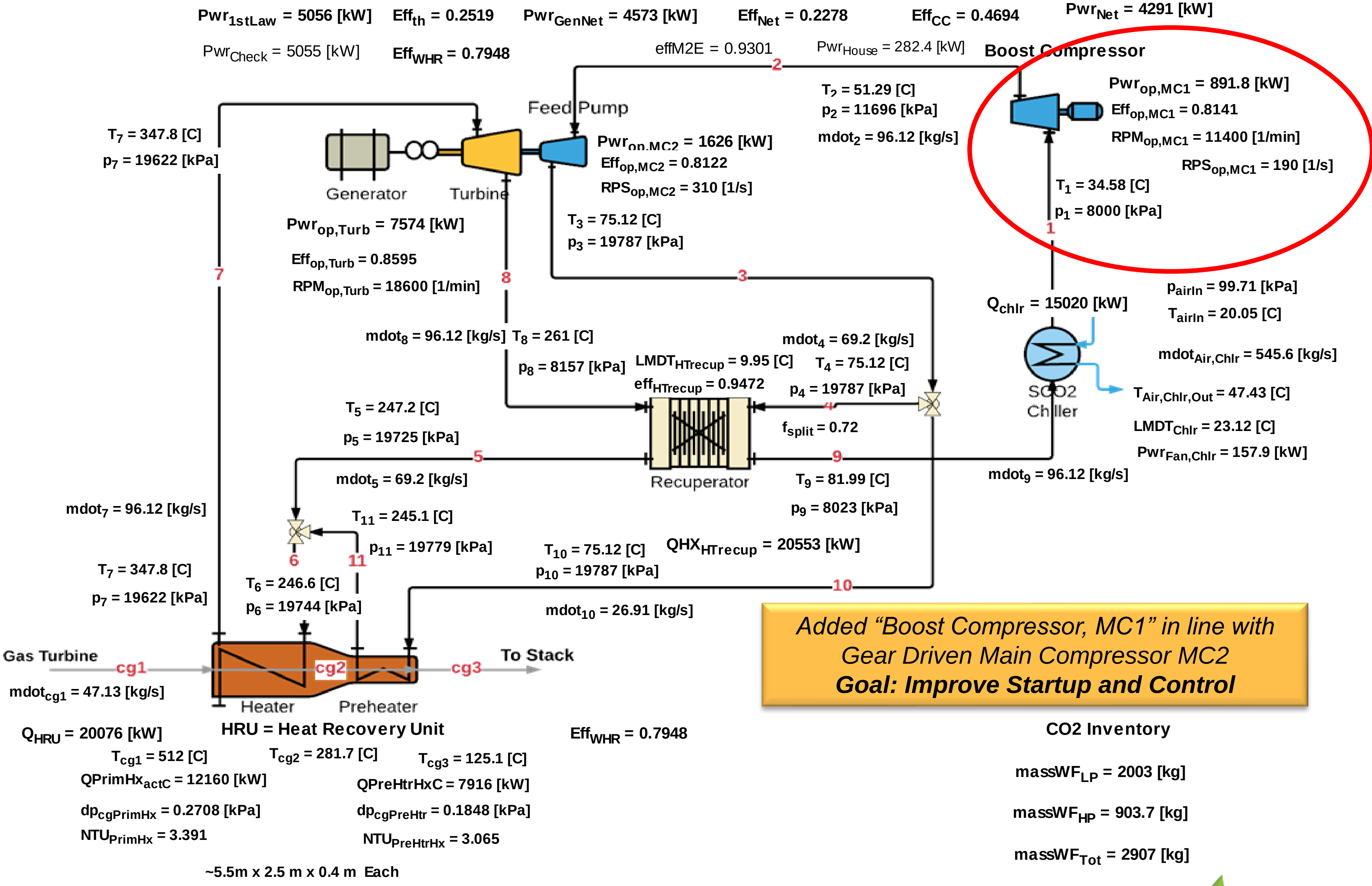

Pwr_{1stLaw} = 5056 [kW] Eff_{th} = 0.2519 Pwr_{GenNet} = 4573 [kW] Eff_{Net} = 0.2278 Eff_{CC} = 0.4694 Pwr_{Net} = 4291 [kW]

Pwr_{Check} = 5055 [kW] Eff_{WHR} = 0.7948   effM2E = 0.9301 Pwr_{House} = 282.4 [kW]

Boost Compressor

$Pwr_{op,MC1}$ = 891.8 [kW]
$Eff_{op,MC1}$ = 0.8141
$RPM_{op,MC1}$ = 11400 [1/min]
$RPS_{op,MC1}$ = 190 [1/s]

T_1 = 34.58 [C]
p_1 = 8000 [kPa]

T_2 = 51.29 [C]
p_2 = 11696 [kPa]
$mdot_2$ = 96.12 [kg/s]

$Pwr_{op,MC2}$ = 1626 [kW]
$Eff_{op,MC2}$ = 0.8122
$RPS_{op,MC2}$ = 310 [1/s]

T_3 = 75.12 [C]
p_3 = 19787 [kPa]

T_7 = 347.8 [C]
p_7 = 19622 [kPa]

$Pwr_{op,Turb}$ = 7574 [kW]
$Eff_{op,Turb}$ = 0.8595
$RPM_{op,Turb}$ = 18600 [1/min]

Q_{chlr} = 15020 [kW]
p_{airIn} = 99.71 [kPa]
T_{airIn} = 20.05 [C]
$mdot_{Air,Chlr}$ = 545.6 [kg/s]
$T_{Air,Chlr,Out}$ = 47.43 [C]
$LMDT_{Chlr}$ = 23.12 [C]
$Pwr_{Fan,Chlr}$ = 157.9 [kW]

$mdot_8$ = 96.12 [kg/s] T_8 = 261 [C]
p_8 = 8157 [kPa]

$LMDT_{HTrecup}$ = 9.95 [C]
$eff_{HTrecup}$ = 0.9472

$mdot_4$ = 69.2 [kg/s]
T_4 = 75.12 [C]
p_4 = 19787 [kPa]
f_{split} = 0.72

T_5 = 247.2 [C]
p_5 = 19725 [kPa]
$mdot_5$ = 69.2 [kg/s]

T_9 = 81.99 [C]
p_9 = 8023 [kPa]
$mdot_9$ = 96.12 [kg/s]

$mdot_7$ = 96.12 [kg/s]

T_{11} = 245.1 [C]
p_{11} = 19779 [kPa]

T_{10} = 75.12 [C]
p_{10} = 19787 [kPa]
$QHX_{HTrecup}$ = 20553 [kW]
$mdot_{10}$ = 26.91 [kg/s]

T_7 = 347.8 [C]
p_7 = 19622 [kPa]

T_6 = 246.6 [C]
p_6 = 19744 [kPa]

$mdot_{cg1}$ = 47.13 [kg/s]

Added “Boost Compressor, MC1” in line with Gear Driven Main Compressor MC2
Goal: Improve Startup and Control

Q_{HRU} = 20076 [kW]   HRU = Heat Recovery Unit Eff_{WHR} = 0.7948

T_{cg1} = 512 [C] T_{cg2} = 281.7 [C] T_{cg3} = 125.1 [C]

$QPrimHx_{actC}$ = 12160 [kW]   QPreHtrHxC = 7916 [kW]

$dp_{cgPrimHx}$ = 0.2708 [kPa] $dp_{cgPreHtr}$ = 0.1848 [kPa]

NTU_{PrimHx} = 3.391 $NTU_{PreHtrHx}$ = 3.065

~5.5m x 2.5 m x 0.4 m Each

CO2 Inventory

$massWF_{LP}$ = 2003 [kg]

$massWF_{HP}$ = 903.7 [kg]

$massWF_{Tot}$ = 2907 [kg]

Supercritical CO_2 Power Cycles Symposium

sCO_2 Process Flow Diagram Of Proposed sCO2 WHR Plant Summary of Design Point Operations

Pwr_{1stLaw} = 5056 [kW] Eff_{th} = 0.2519 Pwr_{GenNet} = 4573 [kW] Eff_{Net} = 0.2278 Eff_{CC} = 0.4694

Pwr_{Net} = 4291 [kW]

Pwr_{Check} = 5055 [kW] Eff_{WHR} = 0.7948   effM2E = 0.9301 Pwr_{House} = 282.4 [kW]

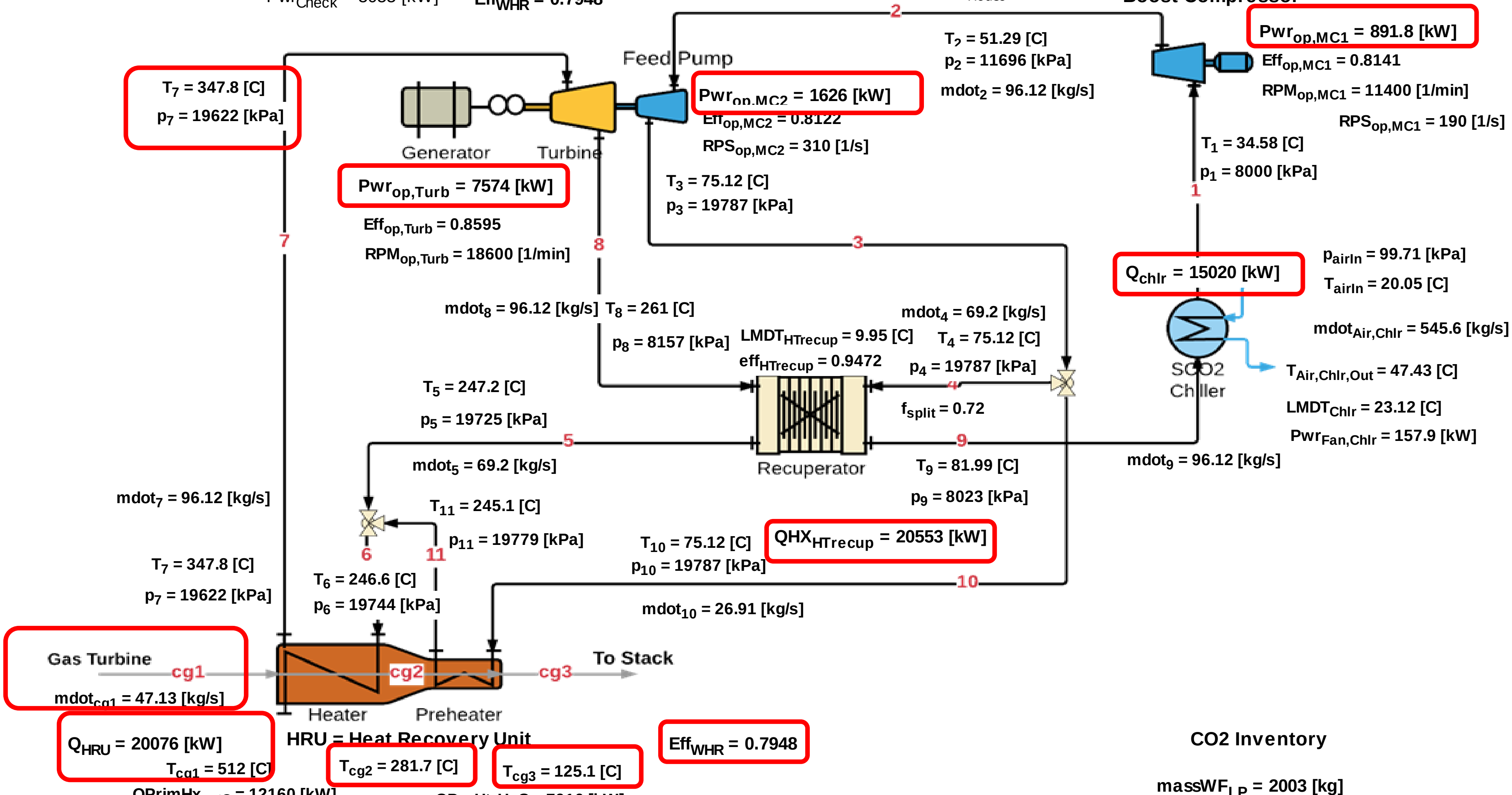

Boost Compressor

$Pwr_{op,MC1}$ = 891.8 [kW]

$Eff_{op,MC1}$ = 0.8141

$RPM_{op,MC1}$ = 11400 [1/min]

$RPS_{op,MC1}$ = 190 [1/s]

T_2 = 51.29 [C]

p_2 = 11696 [kPa]

$mdot_2$ = 96.12 [kg/s]

$Pwr_{op,MC2}$ = 1626 [kW]

$Eff_{op,MC2}$ = 0.8122

$RPS_{op,MC2}$ = 310 [1/s]

T_3 = 75.12 [C]

p_3 = 19787 [kPa]

T_7 = 347.8 [C]

p_7 = 19622 [kPa]

$Pwr_{op,Turb}$ = 7574 [kW]

$Eff_{op,Turb}$ = 0.8595

$RPM_{op,Turb}$ = 18600 [1/min]

T_1 = 34.58 [C]

p_1 = 8000 [kPa]

Q_{chlr} = 15020 [kW]

p_{airIn} = 99.71 [kPa]

T_{airIn} = 20.05 [C]

$mdot_{Air,Chlr}$ = 545.6 [kg/s]

$T_{Air,Chlr,Out}$ = 47.43 [C]

$LMDT_{Chlr}$ = 23.12 [C]

$Pwr_{Fan,Chlr}$ = 157.9 [kW]

$mdot_9$ = 96.12 [kg/s]

$mdot_8$ = 96.12 [kg/s] T_8 = 261 [C]

p_8 = 8157 [kPa]

$LMDT_{HTrecup}$ = 9.95 [C]

$eff_{HTrecup}$ = 0.9472

$mdot_4$ = 69.2 [kg/s]

T_4 = 75.12 [C]

p_4 = 19787 [kPa]

f_{split} = 0.72

T_5 = 247.2 [C]

p_5 = 19725 [kPa]

$mdot_5$ = 69.2 [kg/s]

T_9 = 81.99 [C]

p_9 = 8023 [kPa]

$mdot_7$ = 96.12 [kg/s]

T_{11} = 245.1 [C]

p_{11} = 19779 [kPa]

T_{10} = 75.12 [C]

p_{10} = 19787 [kPa]

$QHX_{HTrecup}$ = 20553 [kW]

T_7 = 347.8 [C]

p_7 = 19622 [kPa]

T_6 = 246.6 [C]

p_6 = 19744 [kPa]

$mdot_{10}$ = 26.91 [kg/s]

Gas Turbine

$mdot_{cg1}$ = 47.13 [kg/s]

Q_{HRU} = 20076 [kW]

T_{cg1} = 512 [C]

HRU = Heat Recovery Unit

T_{cg2} = 281.7 [C]

T_{cg3} = 125.1 [C]

Eff_{WHR} = 0.7948

$QPrimHx_{actC}$ = 12160 [kW]

$dp_{cgPrimHx}$ = 0.2708 [kPa]

NTU_{PrimHx} = 3.391

$QPreHtrHxC$ = 7916 [kW]

$dp_{cgPreHtr}$ = 0.1848 [kPa]

$NTU_{PreHtrHx}$ = 3.065

~5.5m x 2.5 m x 0.4 m Each

CO2 Inventory

$massWF_{LP}$ = 2003 [kg]

$massWF_{HP}$ = 903.7 [kg]

$massWF_{Tot}$ = 2907 [kg]

SwRI

SuperCritical Technologies

➡ Primary Control Variables

☐ Fixed Parameter

Pwr_{1stLaw} = 5056 [kW] Eff_{th} = 0.2519 Pwr_{GenNet} = 4573 [kW] Eff_{Net} = 0.2278 Eff_{CC} = 0.4694 Pwr_{Net} = 4291 [kW]

Pwr_{Check} = 5055 [kW] Eff_{WHR} = 0.7948   effM2E = 0.9301 Pwr_{House} = 282.4 [kW]

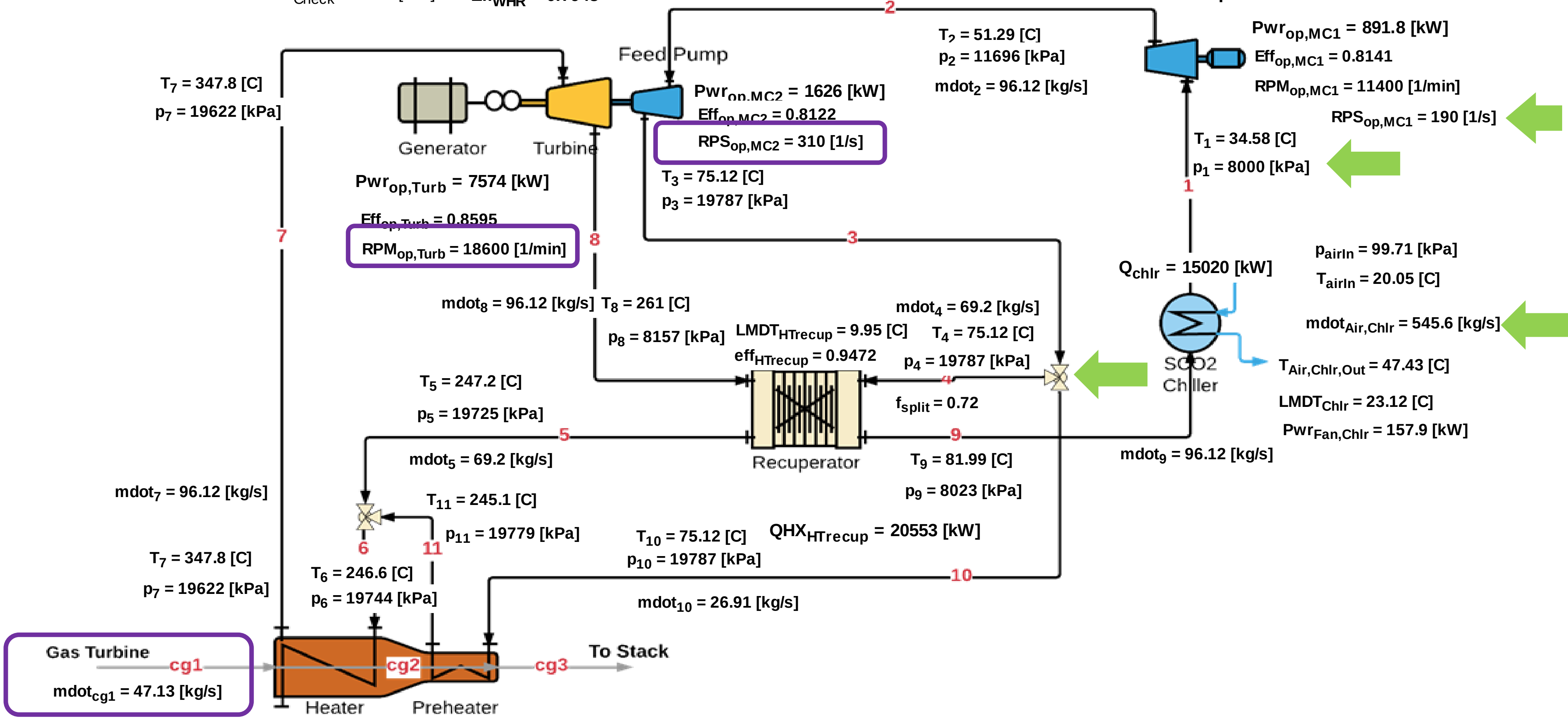

Boost Compressor

$Pwr_{op,MC1}$ = 891.8 [kW]

$Eff_{op,MC1}$ = 0.8141

$RPM_{op,MC1}$ = 11400 [1/min]

$RPS_{op,MC1}$ = 190 [1/s]

T_2 = 51.29 [C]

p_2 = 11696 [kPa]

$mdot_2$ = 96.12 [kg/s]

T_7 = 347.8 [C]

p_7 = 19622 [kPa]

$Pwr_{op,MC2}$ = 1626 [kW]

$Eff_{op,MC2}$ = 0.8122

$RPS_{op,MC2}$ = 310 [1/s]

T_1 = 34.58 [C]

p_1 = 8000 [kPa]

$Pwr_{op,Turb}$ = 7574 [kW]

$Eff_{op,Turb}$ = 0.8595

$RPM_{op,Turb}$ = 18600 [1/min]

T_3 = 75.12 [C]

p_3 = 19787 [kPa]

Q_{chlr} = 15020 [kW]

p_{airIn} = 99.71 [kPa]

T_{airIn} = 20.05 [C]

$mdot_8$ = 96.12 [kg/s] T_8 = 261 [C]

p_8 = 8157 [kPa]

$LMDT_{HTrecup}$ = 9.95 [C]

$eff_{HTrecup}$ = 0.9472

$mdot_4$ = 69.2 [kg/s]

T_4 = 75.12 [C]

p_4 = 19787 [kPa]

$mdot_{Air,Chlr}$ = 545.6 [kg/s]

$T_{Air,Chlr,Out}$ = 47.43 [C]

$LMDT_{Chlr}$ = 23.12 [C]

$Pwr_{Fan,Chlr}$ = 157.9 [kW]

T_5 = 247.2 [C]

p_5 = 19725 [kPa]

f_{split} = 0.72

$mdot_5$ = 69.2 [kg/s]

T_9 = 81.99 [C]

p_9 = 8023 [kPa]

$mdot_9$ = 96.12 [kg/s]

$mdot_7$ = 96.12 [kg/s]

T_{11} = 245.1 [C]

p_{11} = 19779 [kPa]

T_{10} = 75.12 [C]

p_{10} = 19787 [kPa]

$QHX_{HTrecup}$ = 20553 [kW]

T_7 = 347.8 [C]

p_7 = 19622 [kPa]

T_6 = 246.6 [C]

p_6 = 19744 [kPa]

$mdot_{10}$ = 26.91 [kg/s]

Gas Turbine

$mdot_{cg1}$ = 47.13 [kg/s]

Q_{HRU} = 20076 [kW]

HRU = Heat Recovery Unit

Eff_{WHR} = 0.7948

T_{cg1} = 512 [C] T_{cg2} = 281.7 [C] T_{cg3} = 125.1 [C]

$QPrimHx_{actC}$ = 12160 [kW]

$dp_{cgPrimHx}$ = 0.2708 [kPa]

NTU_{PrimHx} = 3.391

QPreHtrHxC = 7916 [kW]

$dp_{cgPreHtr}$ = 0.1848 [kPa]

$NTU_{PreHtrHx}$ = 3.065

~5.5m x 2.5 m x 0.4 m Each

CO2 Inventory

$massWF_{LP}$ = 2003 [kg]

$massWF_{HP}$ = 903.7 [kg]

$massWF_{Tot}$ = 2907 [kg]

Primary Control Variables

- MC1 Compressor Speed
  - Startup and approach to break even (not discussed here)
  - Fine Control of Mass Flow Rate to find maximum power
  - Compensate for changes in ambient air temperatures
- MC1 Inlet Pressure
  - Nominally Kept 8000 kPa, but it can be increased or decreased,
  - Increase to compensate for ambient air temperature increases
  - Decrease to allow for condensation (not discussed in this paper)
  - Can be operated with fixed inventory (not discussed here)
- Fan Speed in Air Cooled Heat Rejection System
  - Compensate for changes in ambient air temperatures
- Split Flow Fraction
  - Primarily used to avoid pinches in recuperator and in primary and pre-heaters
  - Changes are small 0.69-0.72
- Variables Not Changed
  - Speed of Turbine and MC2 Compressor
  - Titan 130 Combustion Gas Flow Rate and Temperature
    - *Not how the combined cycle will really operate*
    - *Used to show how the sCO2 system behaves without Gas Turbine responding to ambient temperature changes.*

20MWe

Modular Power Facility

Gas Turbine	15 MWe
sCO2 Plant	5 MWe
Efficiency	47-48%

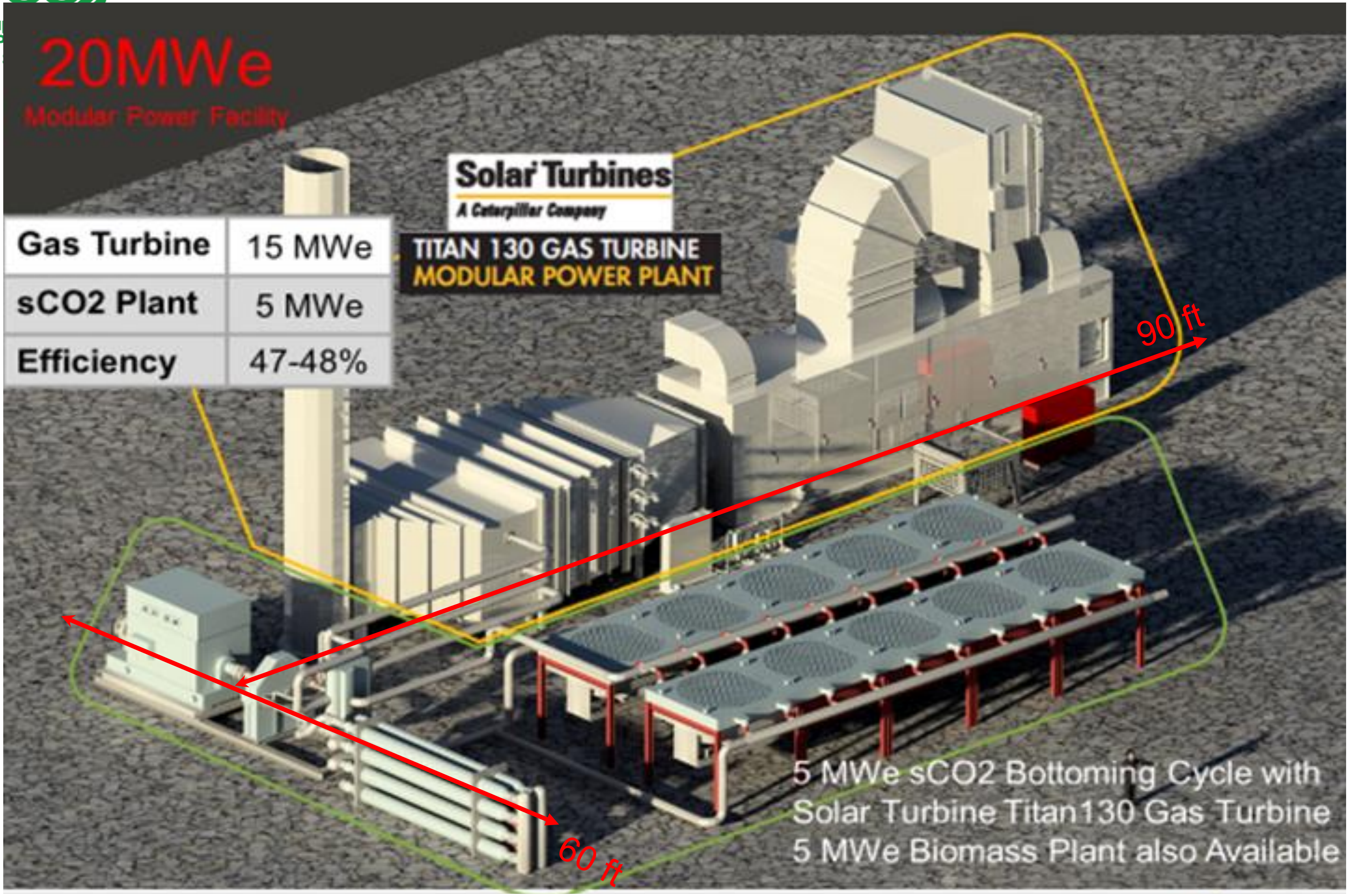

5 MWe sCO2 Bottoming Cycle with
Solar Turbine Titan130 Gas Turbine
5 MWe Biomass Plant also Available

Heat Exchanger Component Models

- Model uses EES64, Univ. of Wisconsin, S. Klein
- EOS uses internal equations within EES
- Heat Exchangers
  - Individual Stand Alone Models
  - Generally Multi-node
  - All models are based on NTU method
  - Heat transfer and pressure drop are calculated
  - Model results are validated by comparing the multi-node response to vendor quotes
  - Integrated System models shown here use single node models with correction factors to Cp or heat transfer coefficient

Compressor and Turbine Components Use Dimensionless Equations for Performance

based on data from SNL test

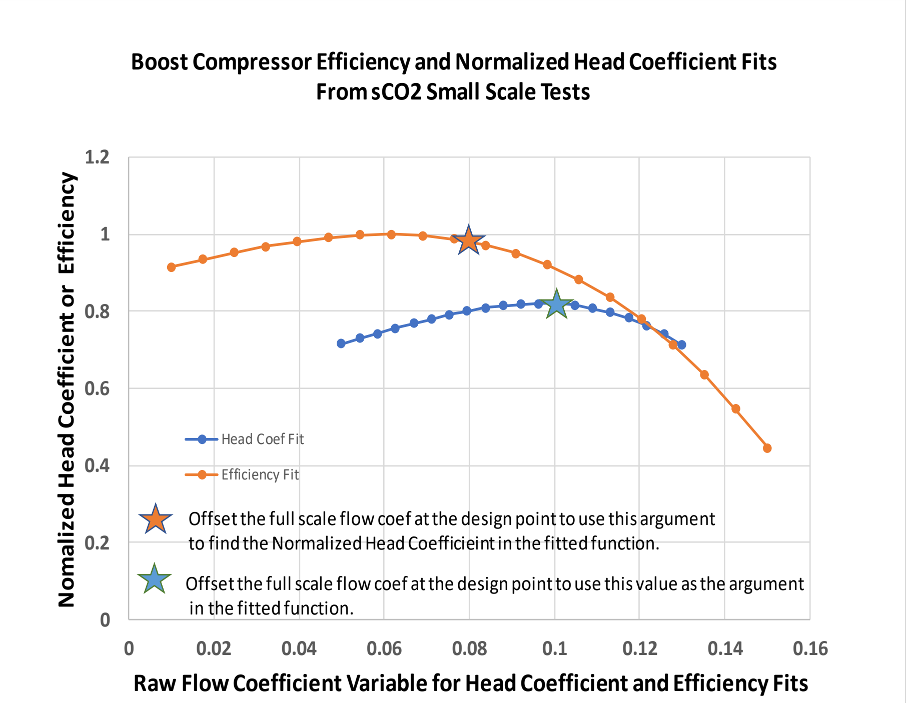

Offset the full scale flow coef at the design point to use this argument to find the Normalized Head Coefficieint in the fitted function.

Offset the full scale flow coef at the design point to use this value as the argument in the fitted function.

Compressor or Pump

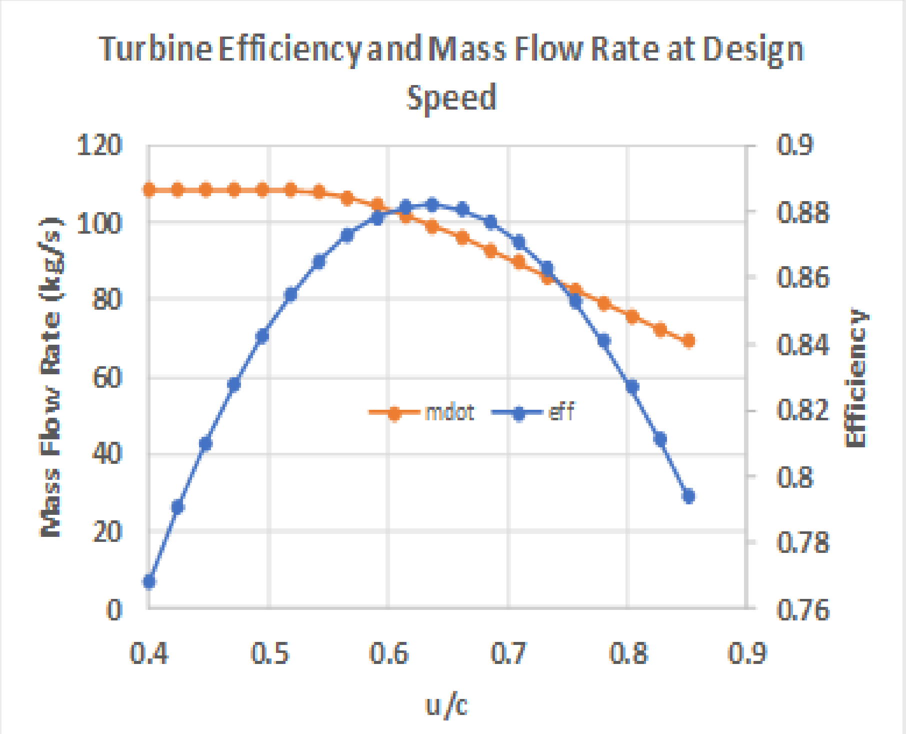

Turbine

$$\left.\begin{array}{l} \emptyset = \dot{V}/ND^3 \quad Flow\ Coef. \\ q_{ad} = \sqrt{dH_{ad}/u^2} \quad Head\ Coef \end{array}\right\} f(rpm)$$

$$\dot{V}, N \text{ and } D\ - vol.\,flow\,rate, speed\,\frac{rev}{s}, tip\,diameter$$

u is the tip speed,dH$_{ad}$ is the change adiabatic head
Scale dHad to 0.58 and displace raw value at 0.08 to design value at .17

$$f(rpm)$$

u/c *ratio of tip speed to spouting velocity*

$$c = \sqrt{2 * dH_{ad}}$$

u/c is provided for the small scale model,
it must be scaled to the design speed

sCO2 System Performance Response to Off-Design Conditions

- Mass flow and Electrical Power versus Main Compressor Speed
- System Wide Temperature Response versus Main Compressor Speed
- System Response to Ambient Temperature Changes

Performance of Power, Mass Flow and Temperatures as a function of MC1 speed changes

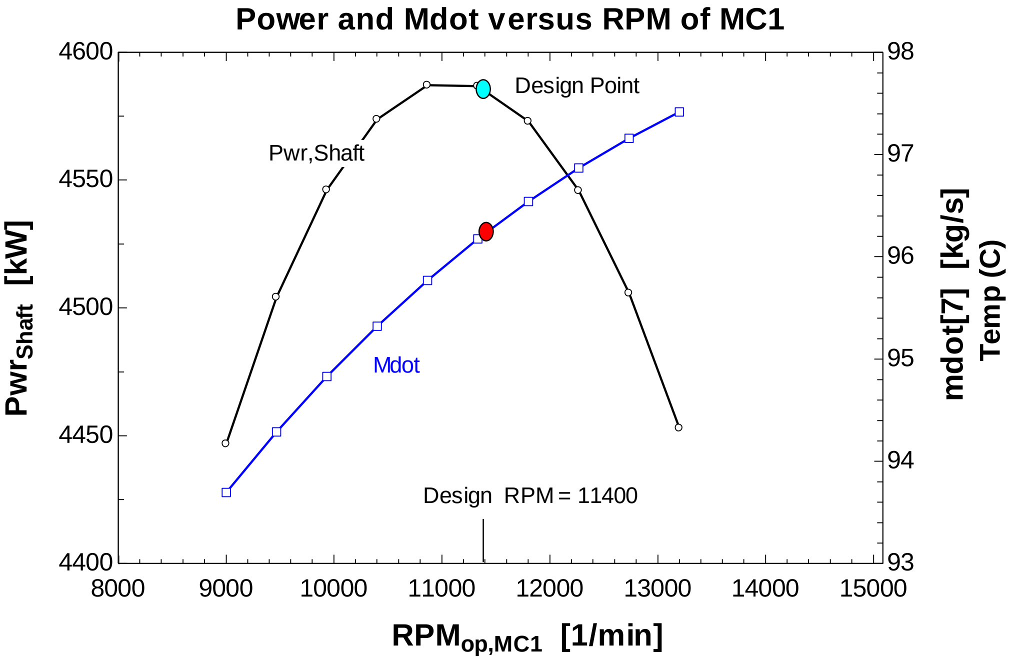

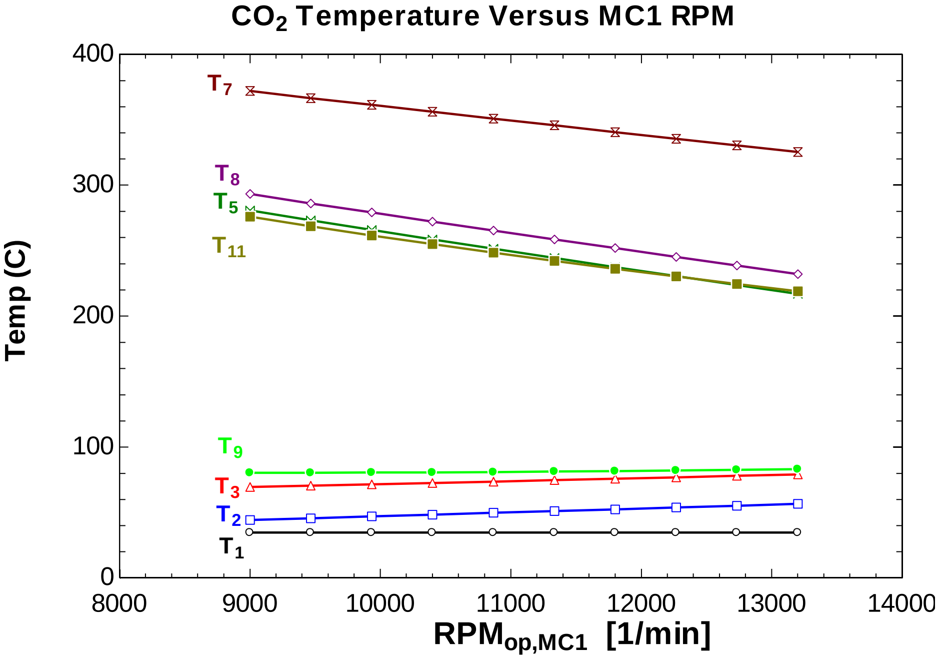

Mdot increases with increasing rpm
Power follows eff vs u/c curve of turbine
Minimal mass flow increases for increased rpm

Hot temp decrease with rpm increases
Cold temps increase with rpm increases
Higher mdot means lower dT across HXs

Performance Response of sCO2 Power System to Ambient Temperature Increases

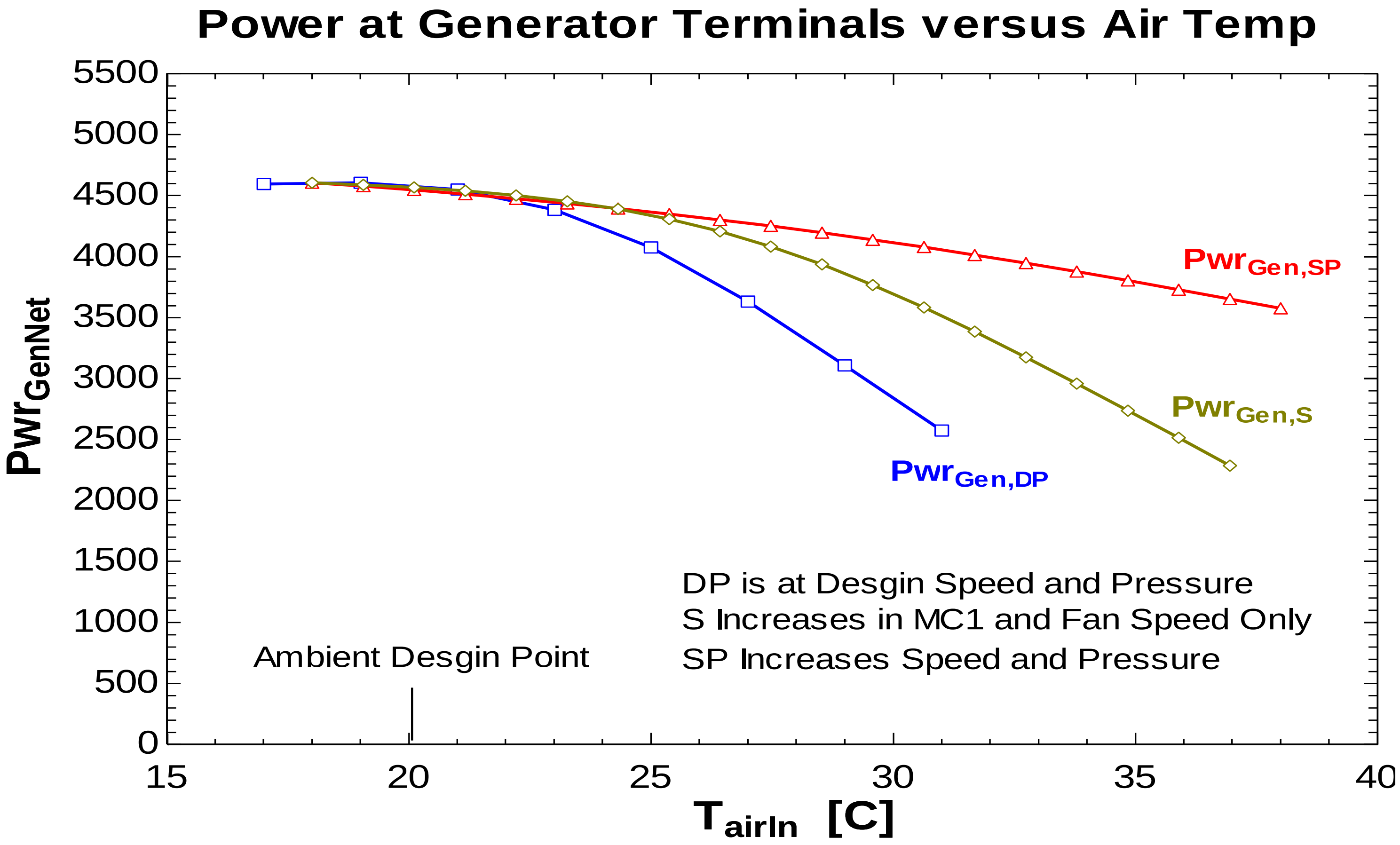

MC1 Speed, Fan Speed, and System Pressure
Mitigate electric power generation due to ambient temperature increases

Conclusions

Steady-State Off Design

- **Conclusions for Combined Cycle** (from last year's presentation)
  - Combined Cycle Efficiency Increases from 35.5% to 46-49%
  - Reduction of Heat Rating from ~9611 BTU/kWh to ~7000 BTU/kWh
- **Conclusions for sCO2 WHR Power Systems (split flow with preheating and with separate and independent compressor)**
  - **Allows for easy startup**
  - **MC1 speed does change mass flow rate**
    - **But, its impact is smaller than I expected**
  - **MC1 speed can be used to fine tune the operating conditions to find eff$_{max}$ of power generation**
  - **Split flow is used to avoid pinches in recuperator and WHR HXs**
  - **Pressure and Speed Control can significantly reduce the impact of changes in ambient temperatures**
- **Next Steps: DYNAMIC MODELING**
  - **Early Results Are Provided**

Dynamic Model

- Energy and Mass Conservation Solved Using Equations from S. Quoilin, ThermoCycle Modelica Library: University of Liege

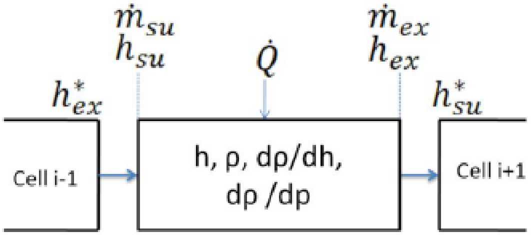

Cell model: Conservation of mass and energy:

$$\dot M_{ex} - \dot M_{su} = V\cdot\frac{d\rho}{dt} = V\cdot\left(\frac{\partial\rho}{\partial h}\cdot\frac{dh}{dt} + \overset{=0}{\boxed{\frac{\partial\rho}{\partial p}}}\cdot\frac{dp}{dt}\right)$$

$$V\cdot\rho\cdot\frac{dh}{dt} = \dot M_{su}\cdot(h_{su}-h) - \dot M_{ex}\cdot(h_{ex}-h) + \dot Q + V\cdot\frac{dp}{dt}$$

- Enthalpy Based h=f(p,ρ), ρ = f(p,h), T=f(h,p) : Cp is never used!
- Simplification because model assumes No Density Changes with pressure
- Density Changes with Temperature or Enthalpy
- Momentum Equation: Uses Momentum Integral Equation from Tri Trinh, TSCYCO Code from MIT, 2009

$$\frac{\partial\langle\dot m\rangle}{\partial t}\frac{L}{A} + \Delta v\frac{\langle\dot m^2\rangle}{2\rho A^2} = -\Delta P - f\frac{\langle\dot m\rangle\left|\langle\dot m\rangle\right|L}{2\rho D_h A^2} - \int_z \rho g\cos\theta\, dz$$

- Flow Split is allowed Continuity Equations (S. Wright)
- Solution Method is Implemented in EES64, semi-implicit solution
- Table Lookup Values T(h,p), density(h,p) (greatly increases speed)
- Heat Transfer and Friction factor only depend on ratio of $(\text{mdot}/\text{mdot}_{\text{design}})^{0.8}$

Time Dependent Inputs

Two Coupled Flow Circuits are Modeled: System is not closed

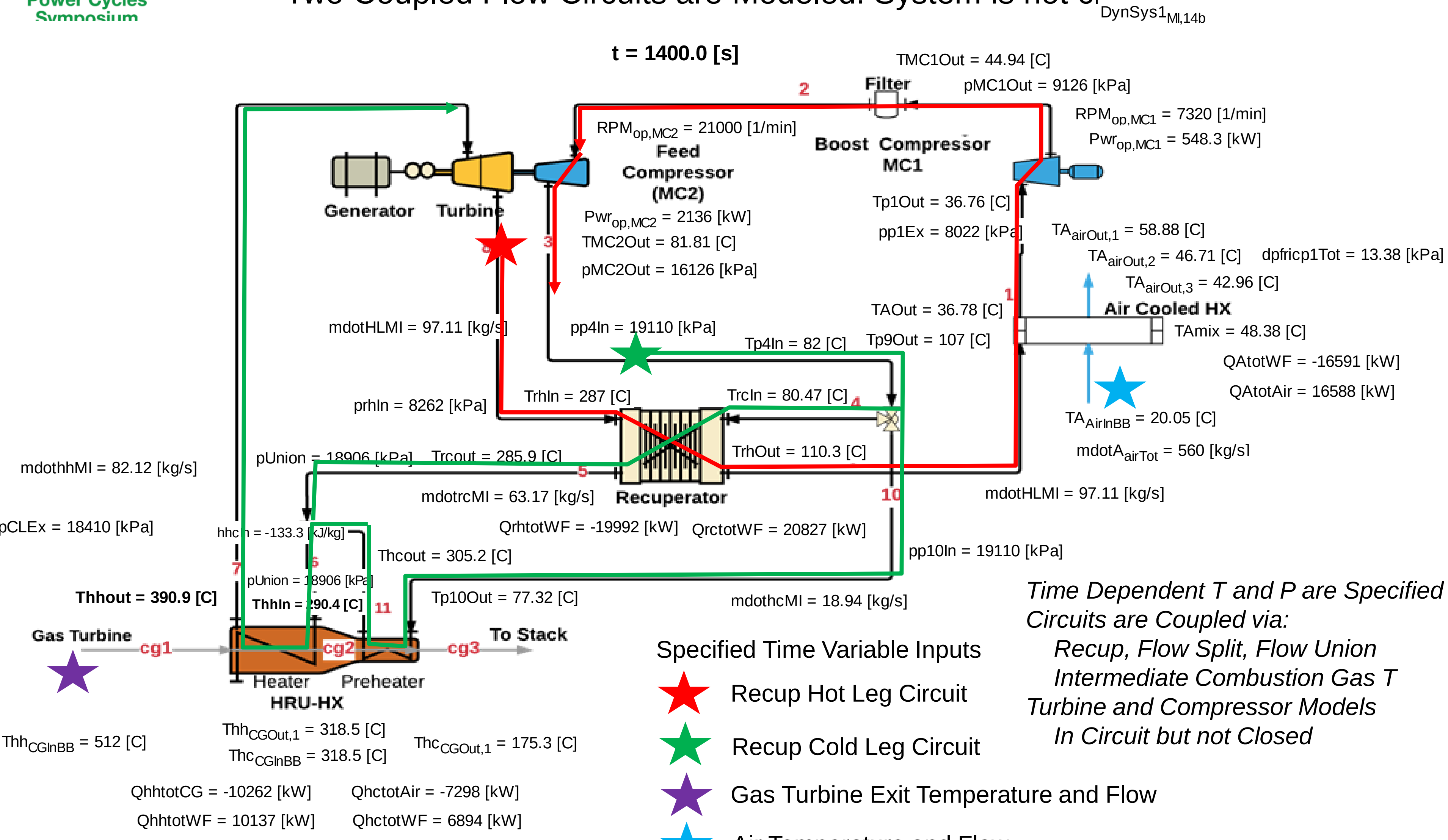

Time Dependent T and P are Specified
Circuits are Coupled via:
- *Recup, Flow Split, Flow Union*
- *Intermediate Combustion Gas T*

Turbine and Compressor Models
- *In Circuit but not Closed*

Specified Time Variable Inputs

★ Recup Hot Leg Circuit

★ Recup Cold Leg Circuit

★ Gas Turbine Exit Temperature and Flow

★ Air Temperature and Flow

Time Dependent Response of Recuperator (rh & rc) and Air Cooled Heat Exchanger (A)

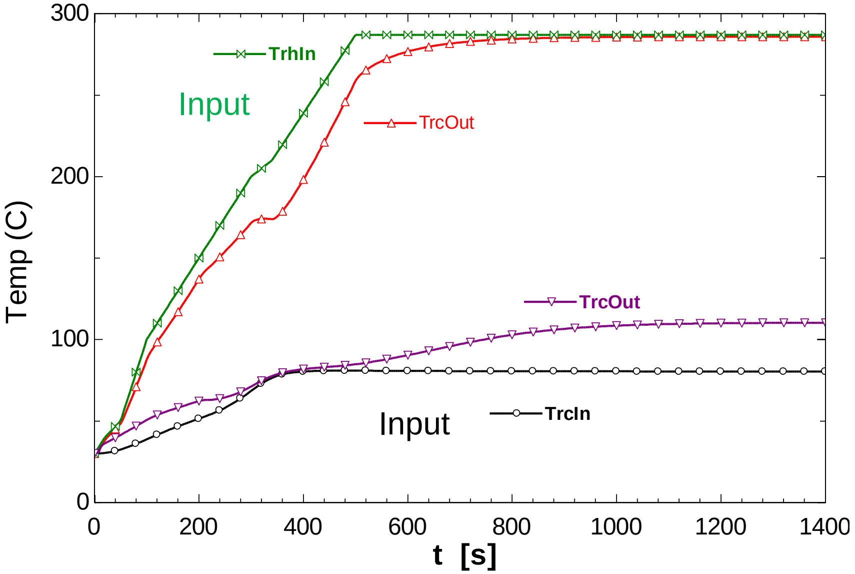
Recuperator Hot & Cold Leg Inlet and Outlet Temperature

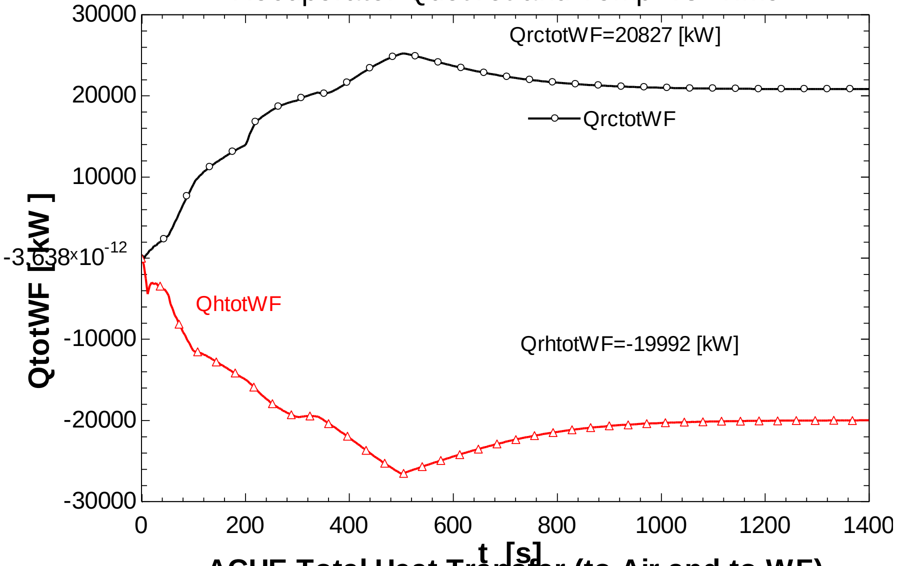
Recuperator QdotTot and Temp vs. Time

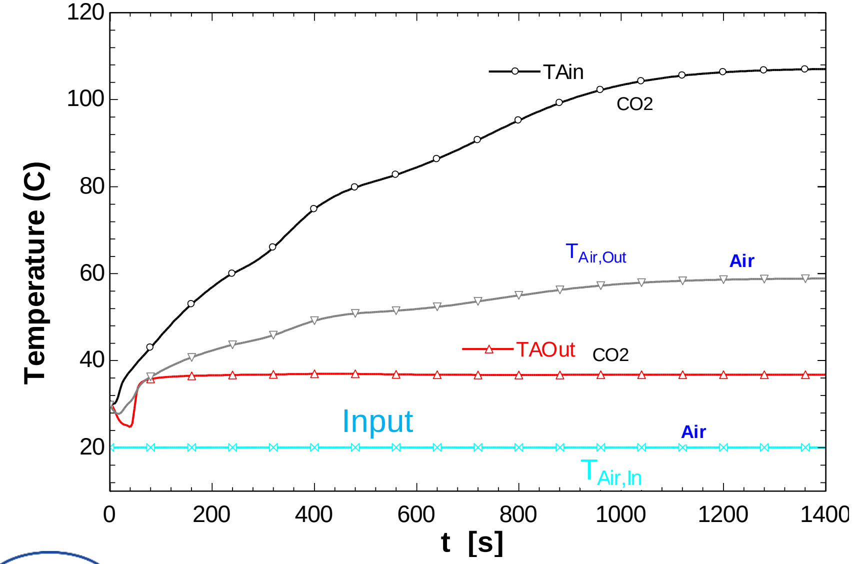
Air Cooled Heat Exchanger: CO_2 & Air Temps

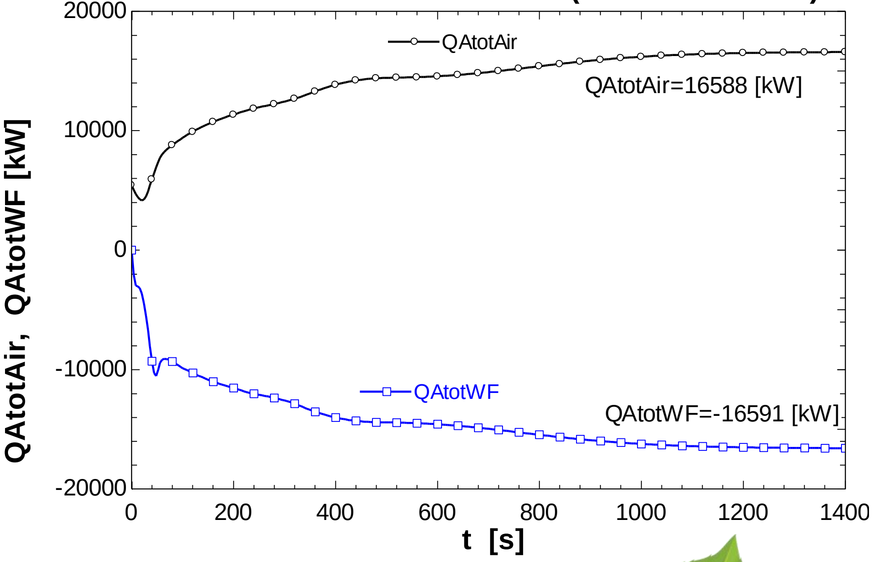
ACHE Total Heat Transfer (to Air and to WF)

Supercritical CO_2 Power Cycles Symposium

Time Dependent Response of Primary Heater (hh) and Preheater (hc)

Primary Heater Temperatures

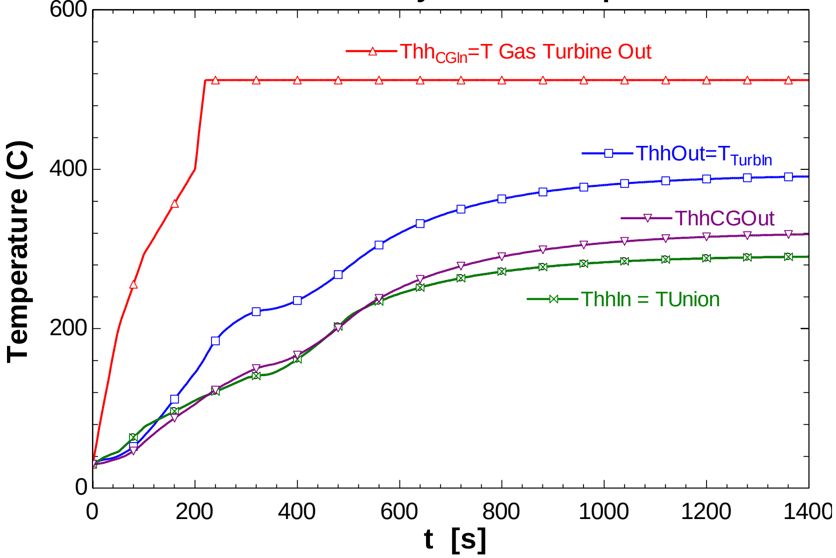

Heat Transferred in Primary Heater

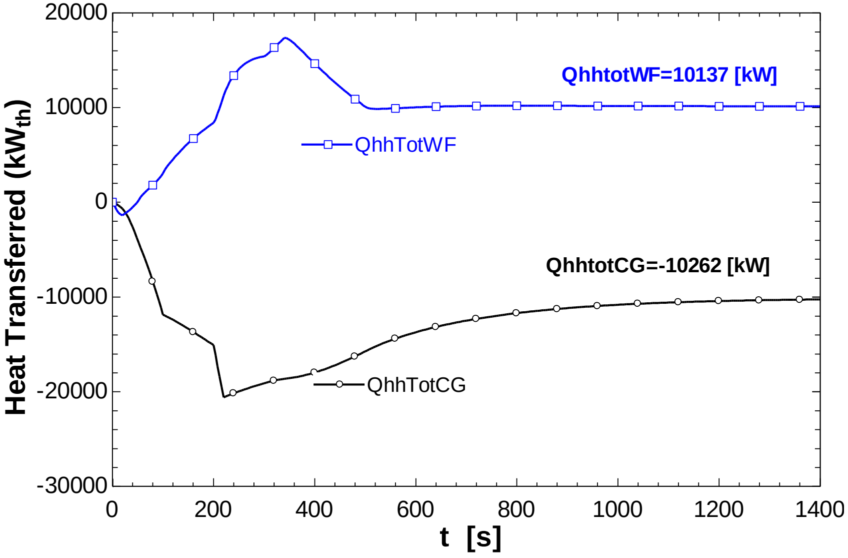

Preheater CO_2 and Combustion Gas Temperature

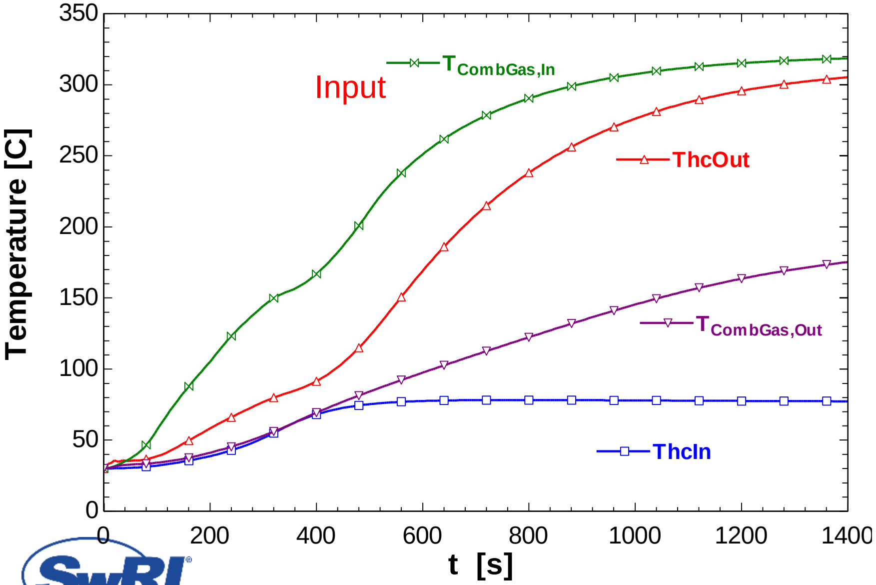

Preheater Heat Transfer to CO_2 and to CG

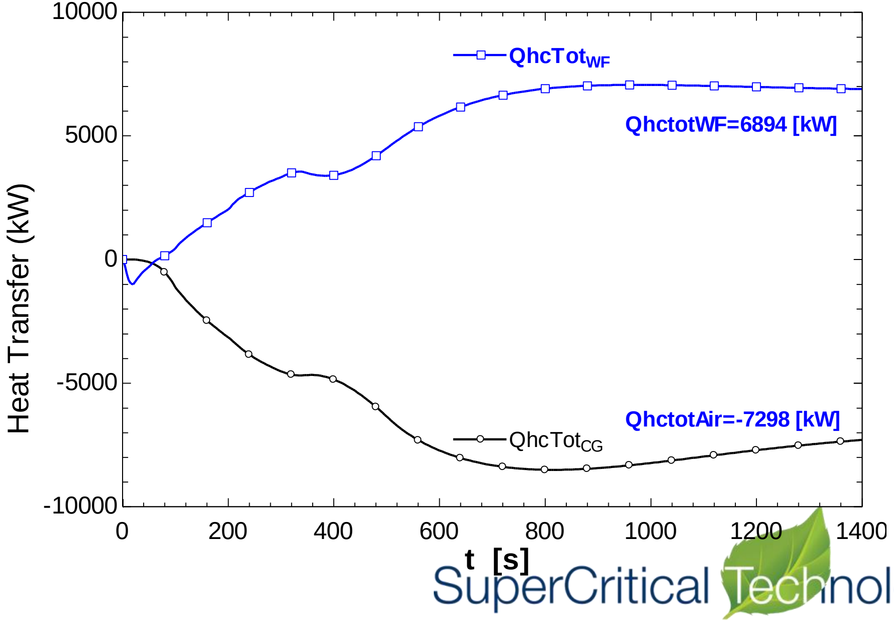

SwRI

SuperCritical Technologies

Mass Flow

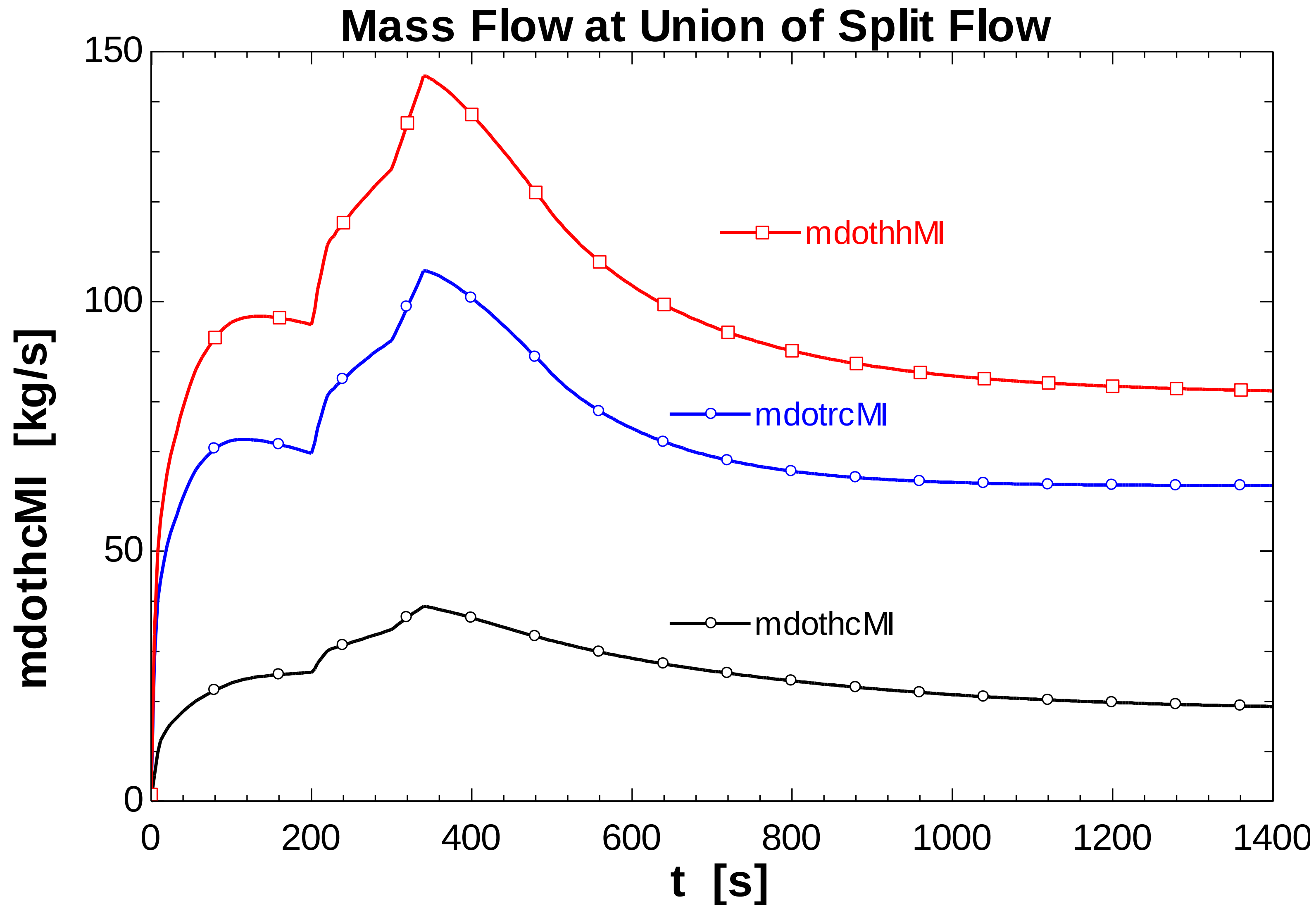
Mass Flow at Union of Split Flow
mdothhMI
mdotrcMI
mdothcMI
mdothcMI [kg/s]
t [s]
0
50
100
150
0
200
400
600
800
1000
1200
1400

Dynamic Model Conclusions

- Dynamic Modeling Solution Method was Implemented in EES64
- Uses Enthalpy Solution method for mass conservation and energy conservation (Thermal Cycle:Liege and TSYCO:MIT)
- Uses Momentum Integral Equation to Capture acceleration of CO_2 mass to determine mass flow rate (as a single slug of fluid)
- *Current model imposes temperature and pressure inputs on the Hot Leg and the Cold Leg, so the models is not fully closed*
- *Turbine and Compressor Models use same models as steady-state solution method but updates are needed to assure physical results at all speeds, pressures, and temperatures*
- *Dynamic Models for all components were developed (multi-node models) and validated to vendor quotes*
- EOS Lookup tables (greatly improves solution time factor of 5 - 10)
- Solutions are in "**real time**" for a 2 second time step:
  - Improvements are still possible
- **Dynamic Modeling is Possible with an Affordable Integrated Software Package (EES64 Professional)**
  - **Simulink or Modelica-Dymola are not needed**

Backup

Recuperator Response to MC1 RPM

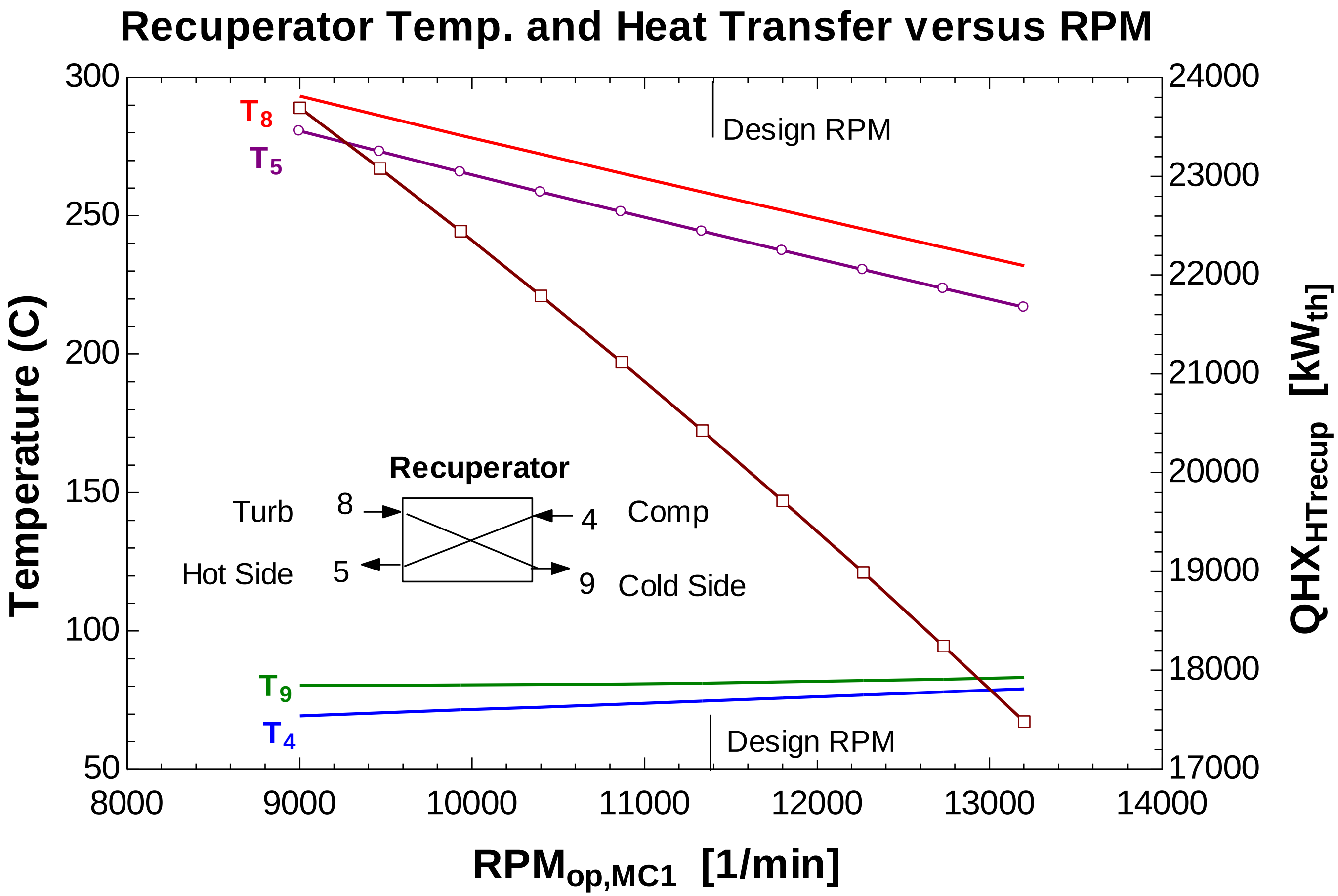

Q *recup* *decreases with increasing rpm*
A pinch forms on the cold side of the recup

Recuperator Response to Changes in MC1 Inlet Pressure

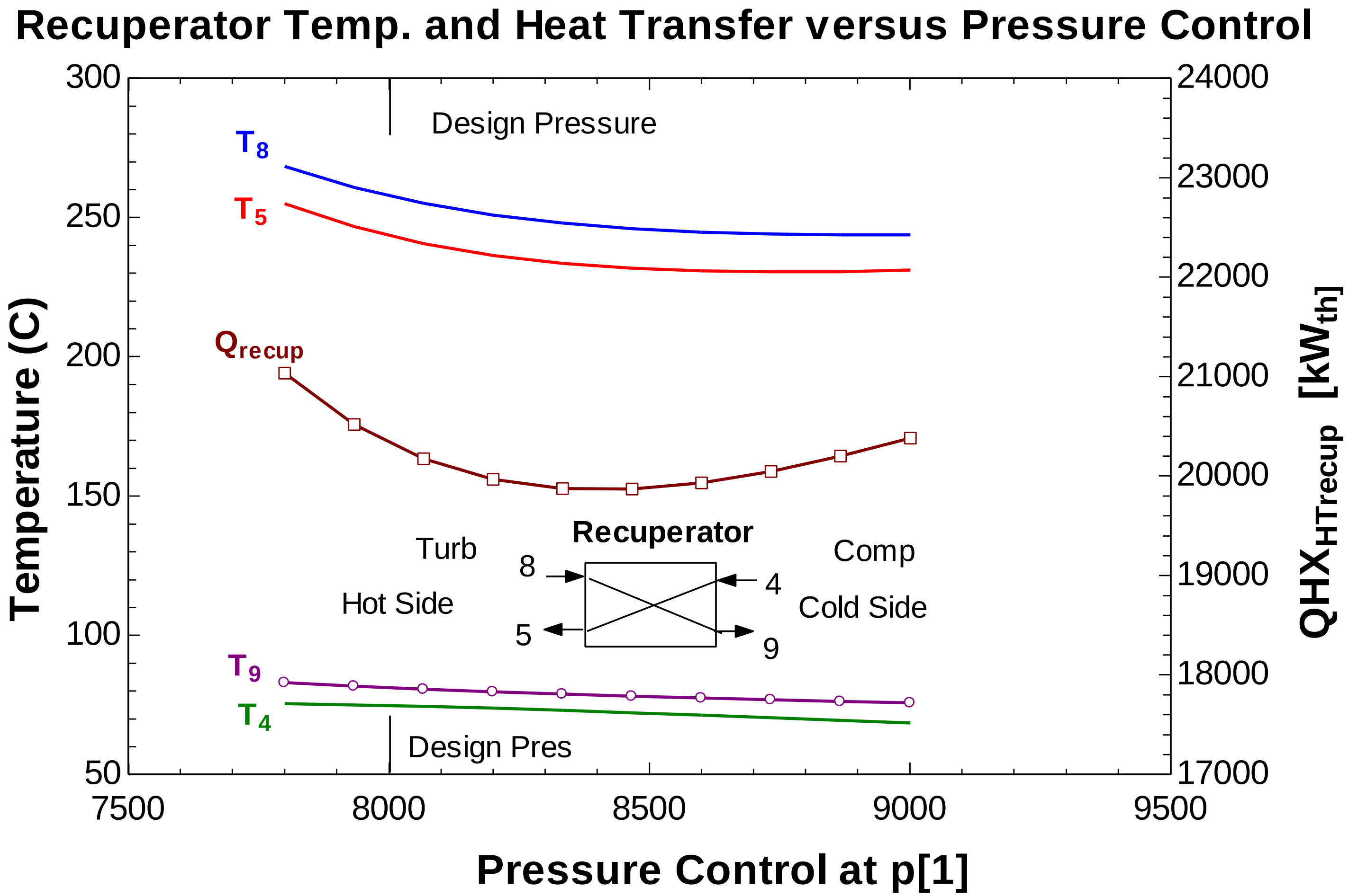

Q_{recup} has a minimum near the operating pressure

Pressure changes do not cause a pinch

System Electric Power Decreases with increasing pressure (not shown in figures)

System Electric Power versus Pressure